Date: Tuesday, 9/4/2007 11:29:35 AM
User: Kim Johnston

Process Sheet

Customer	: CU-DAR001 Dart Helicopters Services	Drawing Name	: DUCT
Job Number	: 34396		
Estimate Number	: 12175		
P.O. Number	: N/A	Part Number	: D34761
This Issue	: 9/4/2007 S.O. No. : N/A	Drawing Number	: D3476 REV A
Prsht Rev.	: NC	Project Number	: N/A
First Issue	: N/A Type : SMALL /MED FAB	Drawing Revision	: A
Previous Run	: 34104	Material	: N/A
Written By	:	Due Date	: 10/4/2007 Qty: 6 Um: Each
Checked & Approved By	: 07.09 04		
Comment	: Est Rev:A New Issue 06-02-03 JLM		

Additional Product

Job Number:

Seq. #:	Machine Or Operation:	Description :
1.0	M304S26GA	304/316 0.018 SHEET

Comment: Qty.: 0.4374 sf(s)/Unit Total : 2.6246 sf(s)
304/316 0.018 SHEET
Batch: ~~M105590~~ HB 07-09-06 M105592

2.0	WATER JET	FLOW WATER JET

Comment: FLOW WATER JET
Cut as per Dwg D3476
Dwg Rev: A
Prog Rev: A
HB 07-09-06 (6)

3.0	QC2	INSPECT PARTS AS THEY COME OFF MACHINE

HB 07-09-06

Comment: INSPECT PARTS AS THEY COME OFF MACHINE

4.0	QC8	SECOND CHECK

Comment: SECOND CHECK
~~02/10/06~~ 02/10/11 (46) (46) counted

5.0	SMALL FAB 1	SMALL & MEDIUM FAB RESOURCE 1

PTO

Comment: SMALL & MEDIUM FAB RESOURCE 1

1-Deburr if necessary.

2-Roll as per Dwg D3476

3-Spot weld as per Dwg D3476 and Dart QSI 018

MF 07-10-15

(1)

Form: rprocess

Dart Aerospace Ltd

W/O:		WORK ORDER CHANGES					
DATE	STEP	PROCEDURE CHANGE	By	Date	Qty	Approval Chief Eng / Prod Mgr	Approval QC Inspector

Part No: _____ PAR #: _____ Fault Category: _____ NCR: Yes (No) DQA: [illegible] Date: 07/10/17

QA: N/C Closed: _____ Date: _____

NCR:		WORK ORDER NON-CONFORMANCE (NCR)						
DATE	STEP	Description of NC Section A	Corrective Action Section B			Verification Section C	Approval Chief Eng	Approval QC Inspector
			Initial Chief Eng	Action Description Chief Eng	Sign & Date			
07/10/16	5	The piece were scrap under review -	[illegible]	Scrap destroy AND replace	07-10-16 M.F	[illegible] 07/10/16	[illegible]	[illegible] 07/10/16

NOTE: Date & initial all entries

Date: Tuesday, 9/4/2007 11:29:35 AM
User: Kim Johnston

Process Sheet

Customer: CU-DAR001 Dart Helicopters Services **Drawing Name:** DUCT

Job Number: 34396 **Part Number:** D34761

Job Number:

Seq. #:	Machine Or Operation:	Description :
6.0	QC11	VISUAL INSPECTION OF SPOT WELDING
	Comment: VISUAL INSPECTION OF SPOT WELDING	SB 07/10/15
7.0	QC5	INSPECT WORK TO CURRENT STEP
	Comment: INSPECT WORK TO CURRENT STEP	SB 07/10/15
8.0	PACKAGING 1	PACKAGING RESOURCE #1
	Comment: PACKAGING RESOURCE #1 Identify and Stock Location: CA	MF 07-10-15
9.0	QC21	FINAL INSPECTION/W/O RELEASE
	Comment: FINAL INSPECTION/W/O RELEASE	07/10/17

Job Completion

U 07-10-17

Form: mprocess

Dart Aerospace Ltd

W/O:		WORK ORDER CHANGES					
DATE	STEP	PROCEDURE CHANGE	By	Date	Qty	Approval Chief Eng / Prod Mgr	Approval QC Inspector

Part No: _____ **PAR #:** _____ **Fault Category:** _____ **NCR:** Yes No **DQA:** _____ **Date:** _____

QA: N/C Closed: _____ **Date:** _____

D407-667-
203
205

WORK ORDER NON-CONFORMANCE (NCR)

		Description of NC Section A	Corrective Action Section B			Verification Section C	Approval Chief Eng	Approval QC Inspector
			Initial Chief Eng	Action Description Chief Eng	Sign & Date			

NOTE: Date & initial all entries

H:\fFORMS\Quality Assurance\approved QA\NCRWO RevD

DESIGN	DRAWN BY	DART AEROSPACE LTD HAWKESBURY, ONTARIO, CANADA	
CHECKED	APPROVED	DRAWING NO. D3476	REV. A SHEET 1 OF 7
DATE 06.01.27		TITLE BLOWER MOTOR ADAPTER	SCALE 1:2
A	06.01.27	NEW ISSUE	

06.04.03

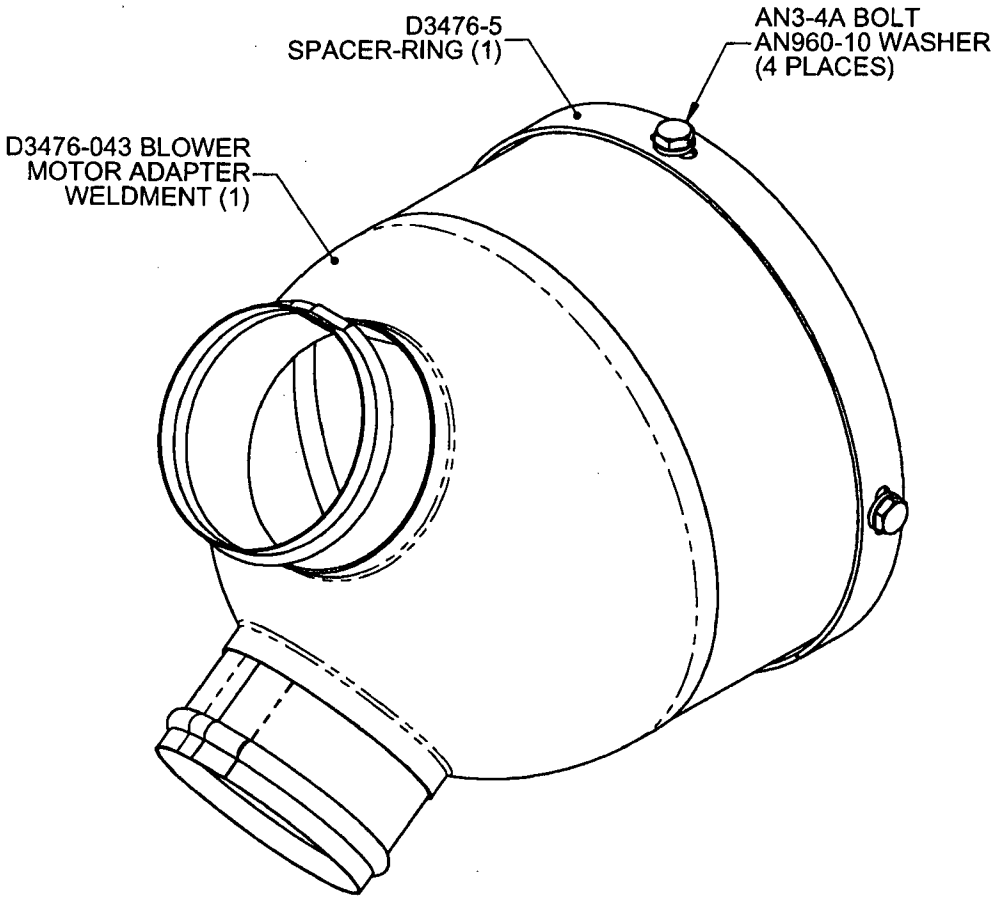

D3476-041 BLOWER MOTOR ADAPTER

1) IDENTIFY WITH DART P/N D3476-041 USING FINE POINT PERMANENT INK MARKER

QTY -041	P/N	DESCRIPTION
X	**D3476-041**	**BLOWER MOTOR ADAPTER**
1	D3476-043	BLOWER MOTOR ADAPTER WELDMENT
1	D3476-5	SPACER-RING
4	AN3-4A	BOLT
4	AN960-10	WASHER

SHOP COPY
RETURN TO
ENGINEERING
UNCONTROLLED COPY
SUBJECT TO AMENDMENT
WITHOUT NOTICE
WORK ORDER
NO. 34396

COPYRIGHT © 2006 BY DART AEROSPACE LTD.
THIS DOCUMENT IS PRIVATE AND CONFIDENTIAL AND IS SUPPLIED ON THE EXPRESS CONDITION THAT IT IS NOT TO BE USED FOR ANY PURPOSE OR COPIED OR COMMUNICATED TO ANY OTHER PERSON WITHOUT WRITTEN PERMISSION FROM DART AEROSPACE LTD.

DESIGN	DRAWN BY	DART AEROSPACE LTD HAWKESBURY, ONTARIO, CANADA	
CHECKED	APPROVED	DRAWING NO. D3476	REV. A SHEET 2 OF 7
DATE 06.01.27		TITLE BLOWER MOTOR ADAPTER	SCALE 1:4

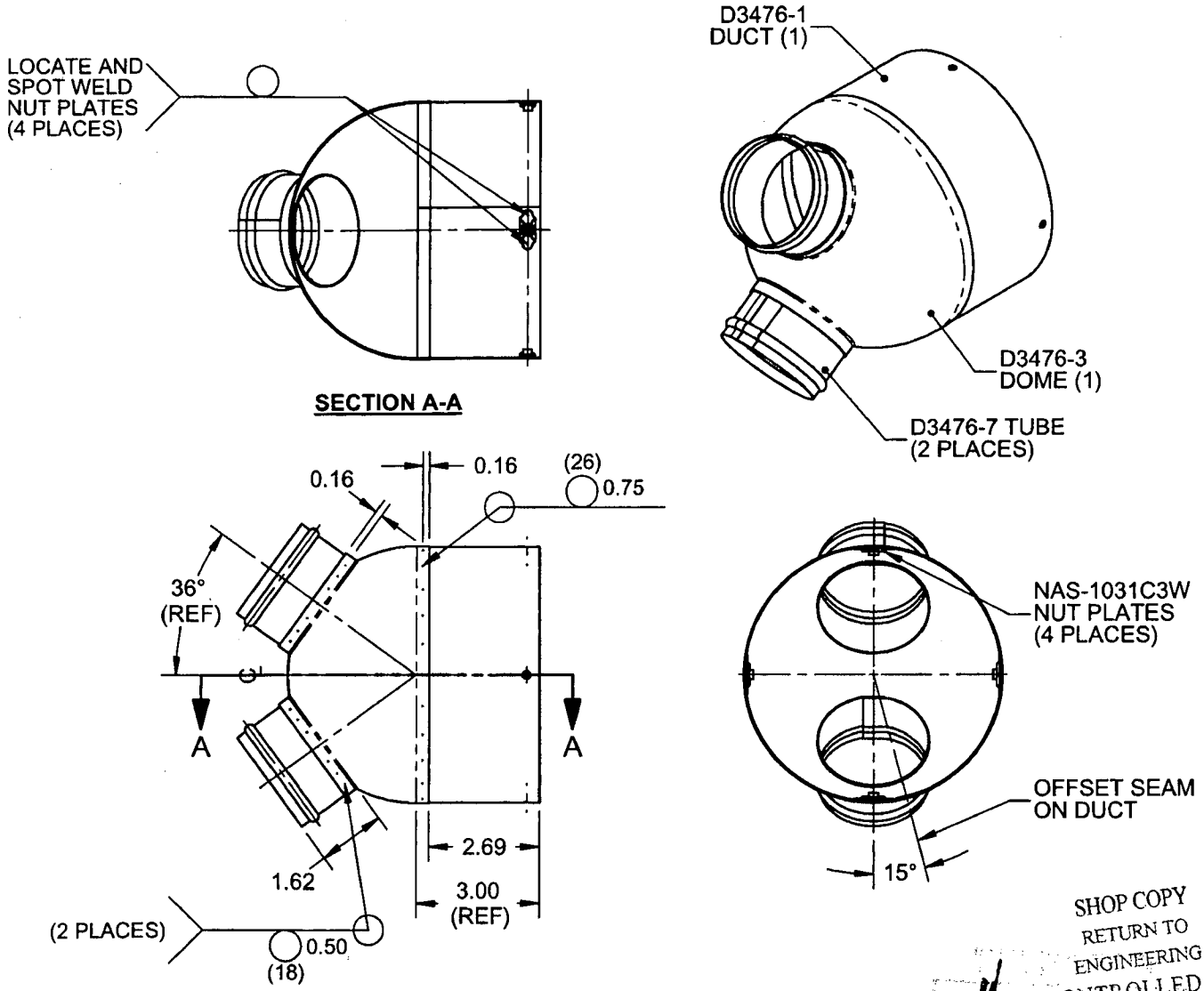

SHOP COPY
RETURN TO
ENGINEERING
UNCONTROLLED COPY
SUBJECT TO AMENDMENT
WITHOUT NOTICE
WORK ORDER
NO. 34316

D3476-043 BLOWER MOTOR ADAPTER WELDMENT

NOTES:

1) SPOT WELD PER DART QSI 004
2) FINISH: NONE
3) PART IS SYMETRICAL ABOUT CENTERLINE
4) TOLERANCES ARE PER DART QSI 018 UNLESS OTHERWISE NOTED
5) ALL DIMENSIONS ARE IN INCHES
6) BREAK ALL SHARP EDGES 0.005 TO 0.010

QTY -043	P/N	DESCRIPTION
X	D3476-043	BLOWER MOTOR ADAPTER WELDMENT
1	D3476-1	DUCT
1	D3476-3	DOME
2	D3476-7	TUBE
4	NAS1031C3W	NUTPLATE

COPYRIGHT © 2006 BY DART AEROSPACE LTD.

THIS DOCUMENT IS PRIVATE AND CONFIDENTIAL AND IS SUPPLIED ON THE EXPRESS CONDITION THAT IT IS NOT TO BE USED FOR ANY PURPOSE OR COPIED OR COMMUNICATED TO ANY OTHER PERSON WITHOUT WRITTEN PERMISSION FROM DART AEROSPACE LTD.

DESIGN	DRAWN BY	DART AEROSPACE LTD HAWKESBURY, ONTARIO, CANADA	
CHECKED	APPROVED	DRAWING NO. D3476	REV. A SHEET 3 OF 7
DATE 06.01.27		TITLE BLOWER MOTOR ADAPTER	SCALE 1:4

06.07.03

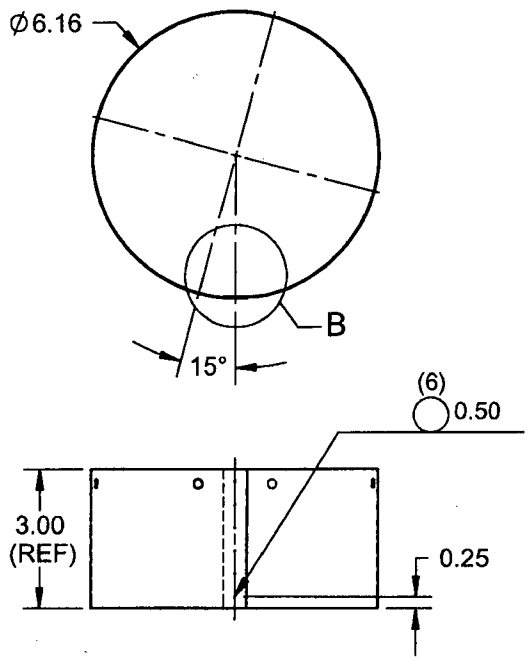

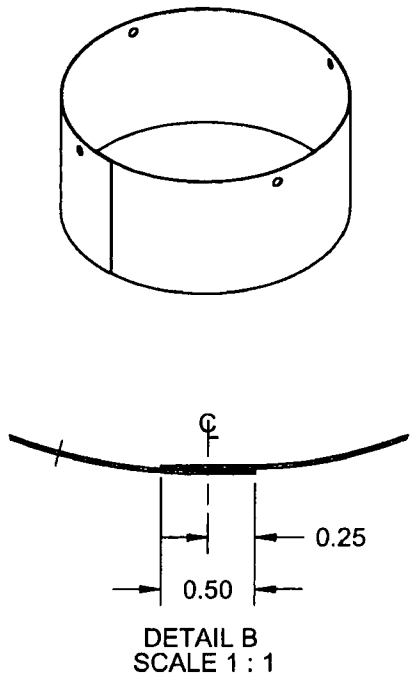

D3476-1 DUCT

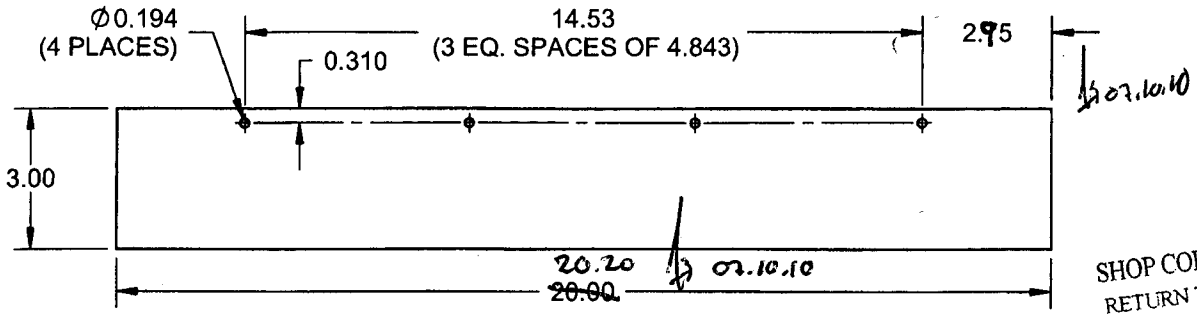

D3476-1F DUCT FLAT PATTERN

SHOP COPY
RETURN TO
ENGINEERING
UNCONTROLLED COPY
SUBJECT TO AMENDMENT
WITHOUT NOTICE
WORK ORDER
NO. 34396

NOTES:

1) MATERIAL: AISI 304/316 SS SHEET PER MIL-S-5019 (ANNEALED) 2B FINISH
   26 GAUGE SS (0.018 THICK)
   (REF. DART SPEC. M304S26GA)
2) SPOT WELD PER DART QSI 004
3) TOLERANCES ARE PER DART QSI 018 UNLESS OTHERWISE NOTED
4) ALL DIMENSIONS ARE IN INCHES
5) BREAK ALL SHARP EDGES 0.005 TO 0.010

COPYRIGHT © 2006 BY DART AEROSPACE LTD.

THIS DOCUMENT IS PRIVATE AND CONFIDENTIAL AND IS SUPPLIED ON THE EXPRESS CONDITION THAT IT IS NOT TO BE USED FOR ANY PURPOSE OR COPIED OR COMMUNICATED TO ANY OTHER PERSON WITHOUT WRITTEN PERMISSION FROM DART AEROSPACE LTD.

DESIGN	DRAWN BY	DART AEROSPACE LTD HAWKESBURY, ONTARIO, CANADA	
CHECKED	APPROVED	DRAWING NO. D3476	REV. A SHEET 4 OF 7
DATE 06.01.27		TITLE BLOWER MOTOR ADAPTER	SCALE 1:2

RELEASED
06.04.03

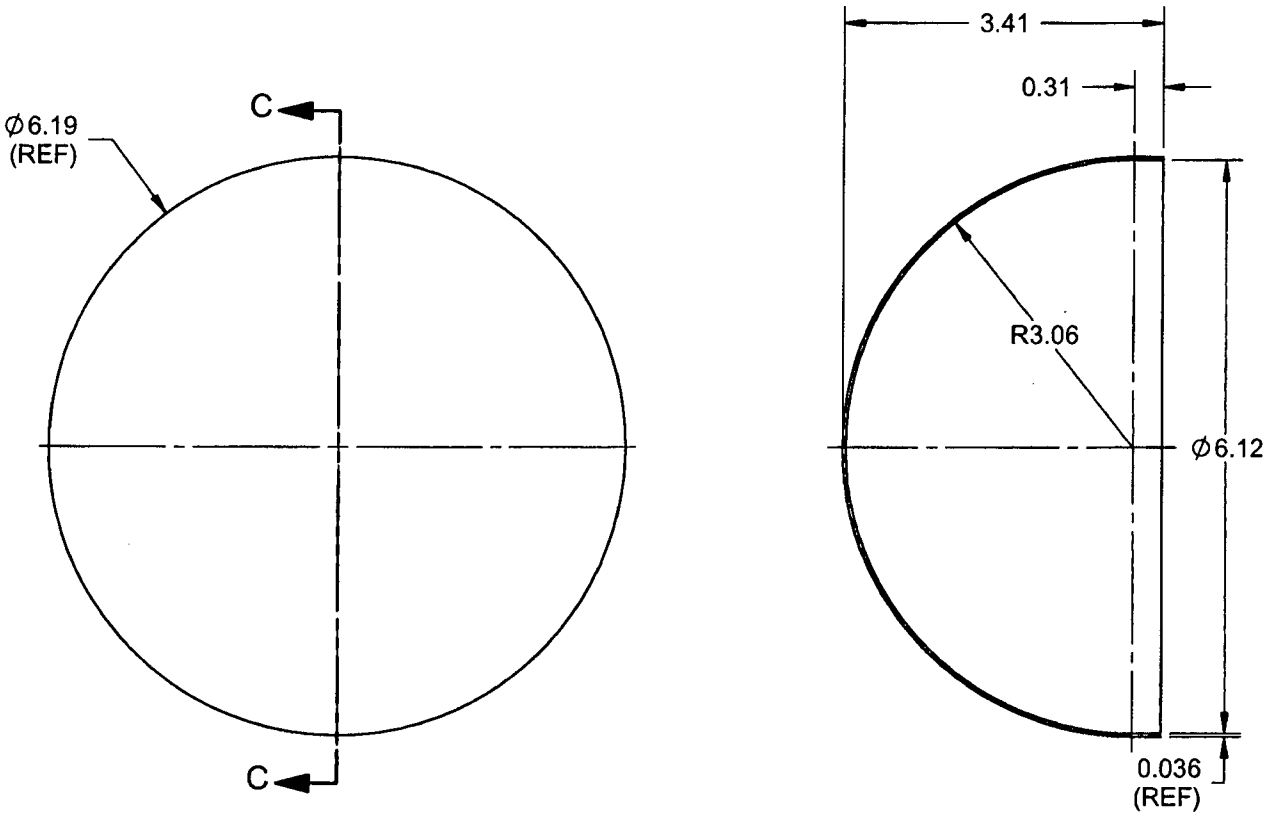

SECTION C-C

D3476-3S DOME, SPINNING DETAIL

NOTES:

1) MATERIAL: AISI 304/316 SS SHEET, 0.036 THICK PER MIL-S-5019 (ANNEALED) 2B FINISH (REF. DART SPEC. M304S20GA)
2) FORM BY SPINNING TO DIMENSION WITHOUT EXCESS THINNING OF MATERIAL (MINIMUM THICKNESS = 0.025").
3) FINISH: NONE
4) TOLERANCES ARE PER DART QSI 018 UNLESS OTHERWISE NOTED
5) ALL DIMENSIONS ARE IN INCHES
6) BREAK ALL SHARP EDGES 0.005 TO 0.010

SHOP COPY
RETURN TO
ENGINEERING
UNCONTROLLED COPY
SUBJECT TO AMENDMENT
WITHOUT NOTICE
WORK ORDER
NO. 34396

COPYRIGHT © 2006 BY DART AEROSPACE LTD.
THIS DOCUMENT IS PRIVATE AND CONFIDENTIAL AND IS SUPPLIED ON THE EXPRESS CONDITION THAT IT IS NOT TO BE USED FOR ANY PURPOSE OR COPIED OR COMMUNICATED TO ANY OTHER PERSON WITHOUT WRITTEN PERMISSION FROM DART AEROSPACE LTD.

DESIGN	DRAWN BY	DART AEROSPACE LTD HAWKESBURY, ONTARIO, CANADA	
CHECKED	APPROVED	DRAWING NO. D3476	REV. A SHEET 5 OF 7
DATE 06.01.27		TITLE BLOWER MOTOR ADAPTER	SCALE 1:2

06.04.03

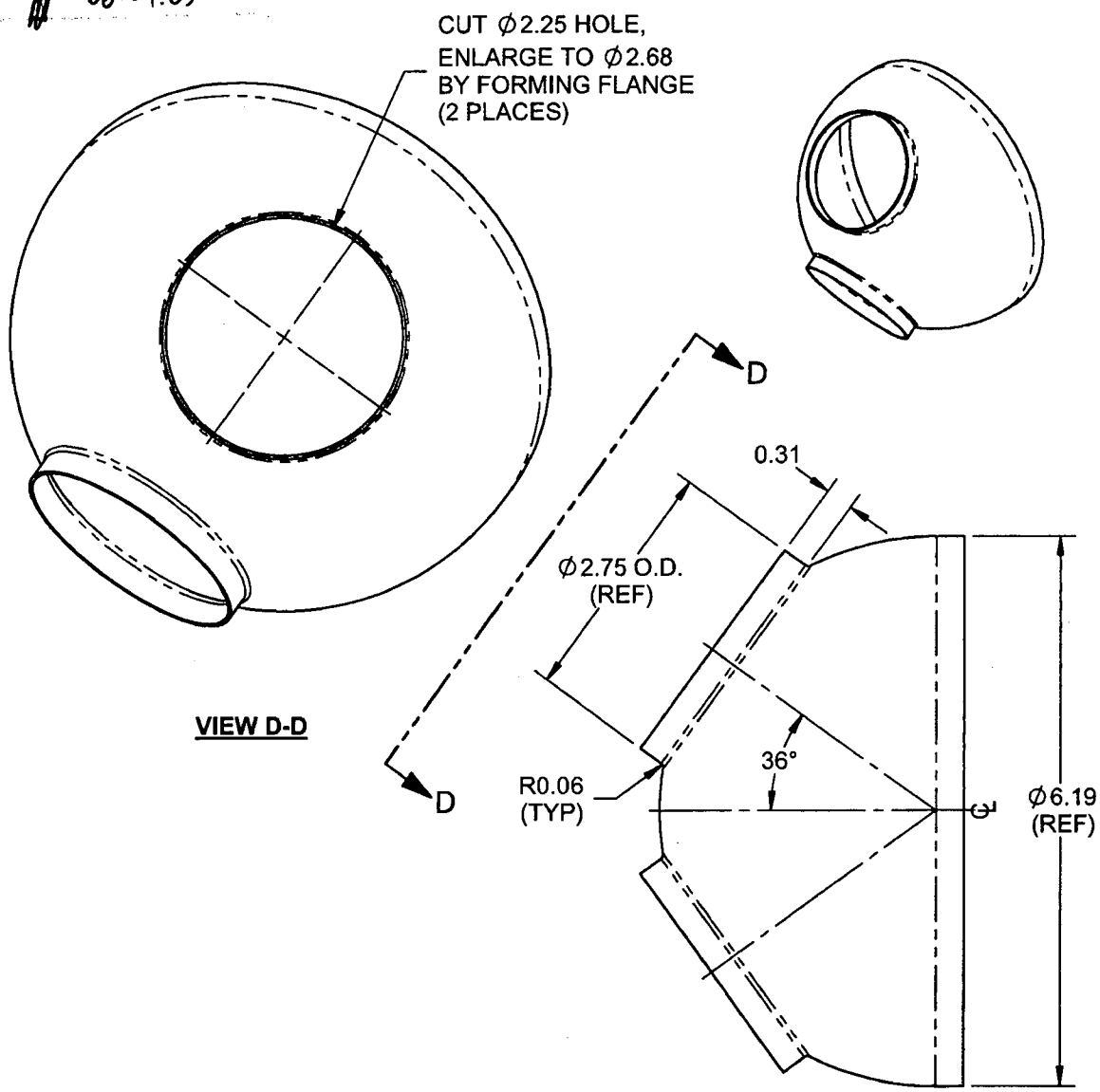

D3476-3 DOME

NOTES:

1) MATERIAL: MAKE FROM D3476-3S
2) FINISH: NONE
3) PART IS SYMMETRICAL ABOUT CENTERLINE
4) TOLERANCES ARE PER DART QSI 018 UNLESS OTHERWISE NOTED
5) ALL DIMENSIONS ARE IN INCHES
6) BREAK ALL SHARP EDGES 0.005 TO 0.010

SHOP COPY
RETURN TO
ENGINEERING
UNCONTROLLED COPY
SUBJECT TO AMENDMENT
WITHOUT NOTICE
WORK ORDER
NO. 34396

COPYRIGHT © 2006 BY DART AEROSPACE LTD.
THIS DOCUMENT IS PRIVATE AND CONFIDENTIAL AND IS SUPPLIED ON THE EXPRESS CONDITION THAT IT IS NOT TO BE USED FOR ANY PURPOSE OR COPIED OR COMMUNICATED TO ANY OTHER PERSON WITHOUT WRITTEN PERMISSION FROM DART AEROSPACE LTD.

DESIGN	DRAWN BY	DART AEROSPACE LTD HAWKESBURY, ONTARIO, CANADA	
CHECKED	APPROVED	DRAWING NO. D3476	REV. A SHEET 6 OF 7
DATE 06.01.27		TITLE BLOWER MOTOR ADAPTER	SCALE 1:2

06.04.03

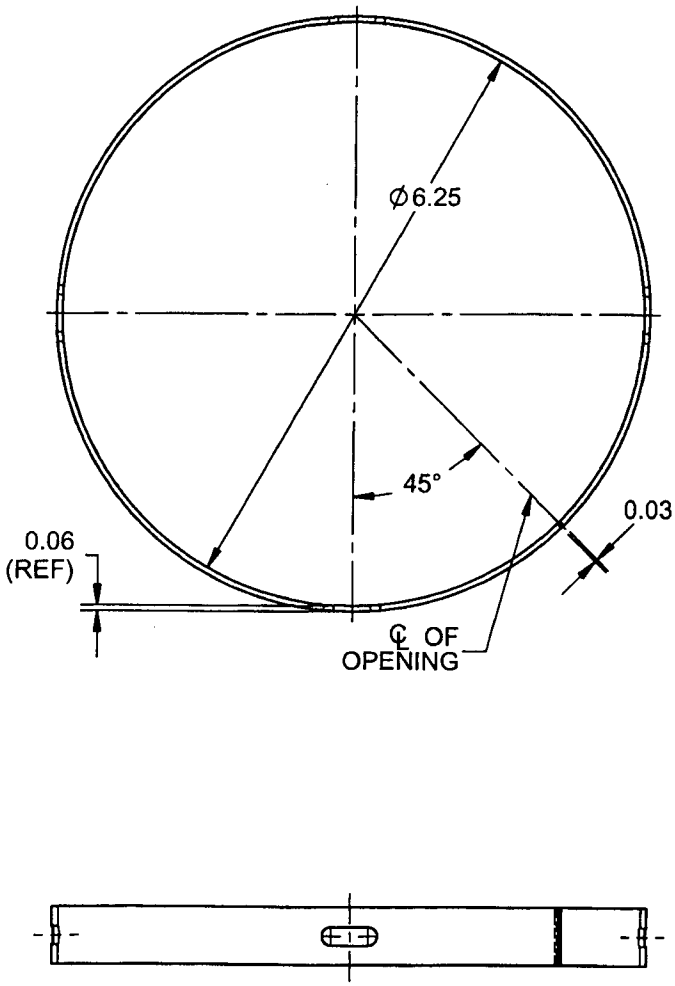

D3476-5 SPACER-RING

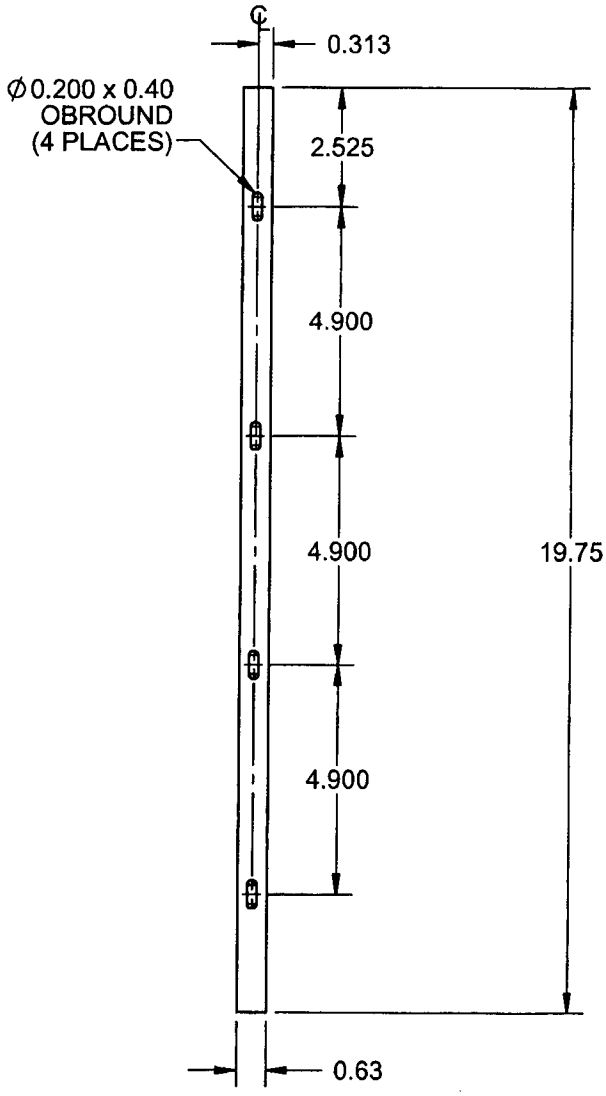

D3476-5F SPACER-RING FLAT PATTERN

NOTES:

1) MATERIAL: AISI 304/316 SS SHEET, 0.063 THICK, PER MIL-S-5019 (ANNEALED) 2B FINISH (REF. DART SPEC. M304S16GA)
2) FINISH: NONE
3) TOLERANCES ARE PER DART QSI 018 UNLESS OTHERWISE NOTED
4) ALL DIMENSIONS ARE IN INCHES
5) BREAK ALL SHARP EDGES 0.005 TO 0.010

SHOP COPY
RETURN TO
ENGINEERING
UNCONTROLLED COPY
SUBJECT TO AMENDMENT
WITHOUT NOTICE
WORK ORDER
NO. 34396

COPYRIGHT © 2006 BY DART AEROSPACE LTD.

THIS DOCUMENT IS PRIVATE AND CONFIDENTIAL AND IS SUPPLIED ON THE EXPRESS CONDITION THAT IT IS NOT TO BE USED FOR ANY PURPOSE OR COPIED OR COMMUNICATED TO ANY OTHER PERSON WITHOUT WRITTEN PERMISSION FROM DART AEROSPACE LTD.

DESIGN	DRAWN BY	DART AEROSPACE LTD HAWKESBURY, ONTARIO, CANADA	
CHECKED	APPROVED	DRAWING NO. D3476	REV. A SHEET 7 OF 7
DATE 06.01.27		TITLE BLOWER MOTOR ADAPTER	SCALE 1:2

06.04.03

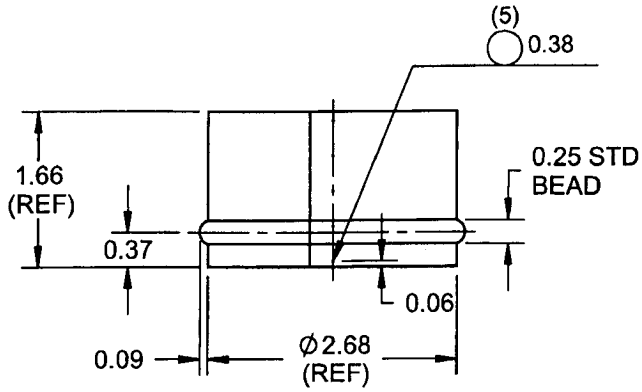

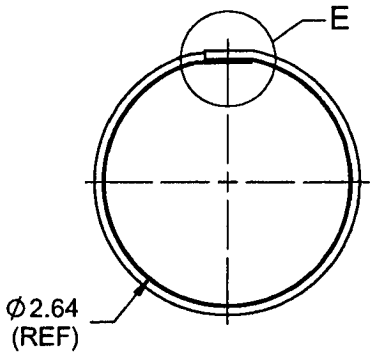

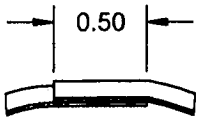

DETAIL E
SCALE 1 : 1

D3476-7 TUBE

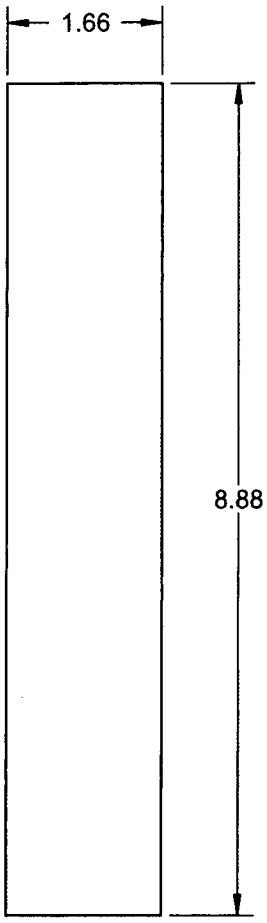

D3476-7 TUBE FLAT PATTERN

NOTES:

1) MATERIAL: AISI 304/316 SS SHEET PER MIL-S-5019 (ANNEALED) 2B FINISH
26 GAUGE SS (0.018 THICK)
(REF. DART SPEC. M304S26GA)
2) SPOT WELD PER DART QSI 004
3) TOLERANCES ARE PER DART QSI 018 UNLESS OTHERWISE NOTED
4) ALL DIMENSIONS ARE IN INCHES
5) BREAK ALL SHARP EDGES 0.005 TO 0.010

SHOP COPY
RETURN TO
ENGINEERING
UNCONTROLLED COPY
SUBJECT TO AMENDMENT
WITHOUT NOTICE
WORK ORDER
NO. 34396

COPYRIGHT © 2006 BY DART AEROSPACE LTD.
THIS DOCUMENT IS PRIVATE AND CONFIDENTIAL AND IS SUPPLIED ON THE EXPRESS CONDITION THAT IT IS NOT TO BE USED FOR ANY PURPOSE OR COPIED OR COMMUNICATED TO ANY OTHER PERSON WITHOUT WRITTEN PERMISSION FROM DART AEROSPACE LTD.

DART AEROSPACE LTD	Work Order:	34396
Description: DUCT	Part Number:	D3476-1
Inspection Dwg: Rev: A		Page 1 of 1

FIRST ARTICLE INSPECTION CHECKLIST

[X] First Article [ ] Prototype

Drawing Dimension	Tolerance	Actual Dimension	Accept	Reject	Method of Inspection	Comments
3.00	+/- .030	3.00	*			
20.00	+/- .030	20.00	*			
2.75	+/- .030	2.75	*			
14.53	+/- .030	14.53	*			
ø .194	+ .005 - .001	.196	*			
.018	+/- .010	.019	*			

Measured by:	HB	Audited by:	EN	Prototype Approval:	n/a
Date:	07-09-06	Date:	07/09/06	Date:	

Rev	Date	Change	Revised by	Approved
A		New Issue	KJ/JLM	

DART AEROSPACE LTD	Work Order:	34396
Description: Duct	Part Number:	D3476-1
Inspection Dwg: D3476 Rev:		Page 1 of 1

FIRST ARTICLE INSPECTION CHECKLIST

[X] First Article [ ] Prototype

Drawing Dimension	Tolerance	Actual Dimension	Accept	Reject	Method of Inspection	Comments
Ø .194	+.005 -.001	.194	*			
.310	+/- .010	.310	*			
2.75	+/- .030					
3.00	+/- .030	3.009	*			
14.53	+/- .030	14.53	*			
20.20	+/- .030	20.20	*			

Measured by:	LB	Audited by:	GM	Prototype Approval:	
Date:	07-10-11	Date:	07/10/11	Date:	

Rev	Date	Change	Revised by	Approved
A		New Issue	KJ/JLM	

SPOT WELD TEST RECORD
AMS-W-6858A
CLASS 'C '

TEST NO#: 19

EMPLOYEE: Melanie Fautenx

PART NUMBER: D 3476-1 JOB NUMBER: B 34396

MATERIAL TYPE: 3.04 L MATERIAL THICKNESS: .018

GROUP SPECIFICATION
- ☐ Group 1: Aluminum & magnesium
- ☐ Group 2: Iron; nickel; cobalt
- ☑ Group 3: Titanium

TEST RESULTS

	PASS	FAIL	
VISUAL:	[✓]	[ ]	
PENETRATION:	[✓]	[ ]	
PULL STRENGTH:	[✓]	[ ]	PSI Reading: _____

Qualified in accordance with standard AMS-W-6858A and QSI 004 (ref: 4.3)

DATE OF TEST COUPON: 07/10/15
QUALIFIER: SB